GINGER & JAGGER



NEW

Magma | Table Lamp

Ascending through the mantle of the Earth, molten magma becomes colder, and forms rocks that are testaments to its living core. The Magma Table Lamp provides a poetical meditation on these elements, with its carefully layered composition. The geometrical foundation, in stone, serves as a base for a magma rock molded in brass casting. The light is framed by stylized fabric abat-jour.

AS PICTURED

MATERIALS & FINISHES

Base: Romano Travertine in natural finishing.
Cast brass: Antique Brass.
Lampshade: Medium rectangular lampshade in Wild Silk in Silver.

BULBS & VOLTAGE

1 x E27 LED Dimmable, 4W 2700K 470lm | 230V
EU & UK - Bulb, socket and plug included;
USA - Wiring, bulb, socket and plug not included;
Non-EU requirements - Please send an email to info@gingerandjagger.com

LIGHT CONTROL OPTIONS

Supplied with touch dimmer on the metal section, with 3 levels of light intensity (with dimmable bulb). Also available with standard switch or dimmable switch, upon request.
DALI controller system available (upcharge over retail price), upon request.

CUSTOM/BESPOKE

This product is not suitable for customization.

ENVIRONMENT

This product is made for living areas in interior spaces only. This product is not specified for bathrooms, spa's or humid environments. Not suitable for exteriors.

DIMENSIONS

W: 34 cm | 13,3”
D: 40 cm | 15,7”
H: 74 cm | 29”

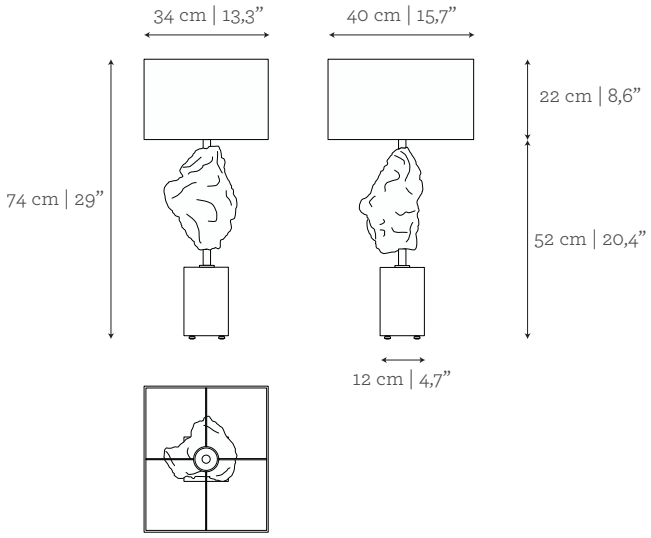

VOLUME

0,10 m³ | 3,53 ft³

WEIGHT

12,3 kg | 27,1 lbs

Packed (in wooden case)

0,3 m³ | 10,59 ft³

52,3 kg | 115,3 lbs

PRODUCT OPTIONS

MATERIALS & FINISHES

Base: Carrara, Negro Marquina, Estremoz and Estremoz Rose marble in honed finishing, or Romano Travertine in natural finishing.
Cast brass: Antique Brass, Antique Silver or Antique Copper.
Lampshade: Wild Silk in Ivory, Honey, Green Moss, Black Amber or Silver.

Base:

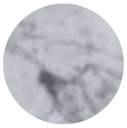

CARRARA
Honed



NEGRO MARQUINA
Honed



ESTREMOZ
Honed



ESTREMOZ ROSE
Honed



ROMANO TRAVERTINE
Natural

Cast Brass:



ANTIQUE BRASS
Brass with patina



ANTIQUE SILVER
Brass with silver leaf and patina



ANTIQUE COPPER
Brass with copper leaf and patina

Lampshade:



IVORY

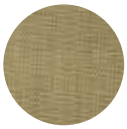

HONEY



GREEN MOSS

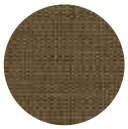

BLACK AMBER

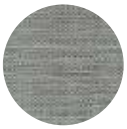

SILVER

PRODUCT OPTIONS

LAMPSHADE

Large round lampshade:

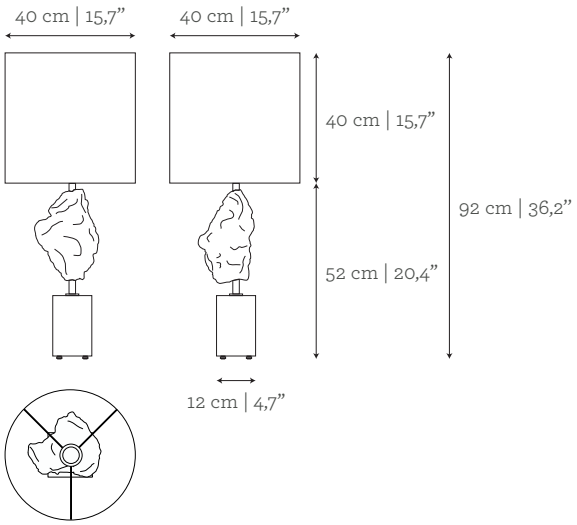

Conic lampshade:

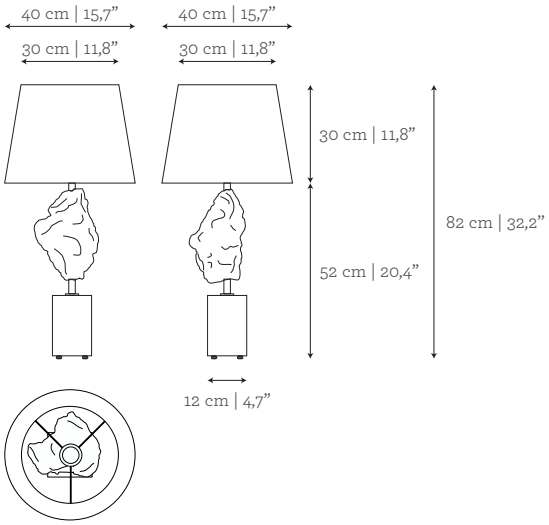

Medium round lampshade:

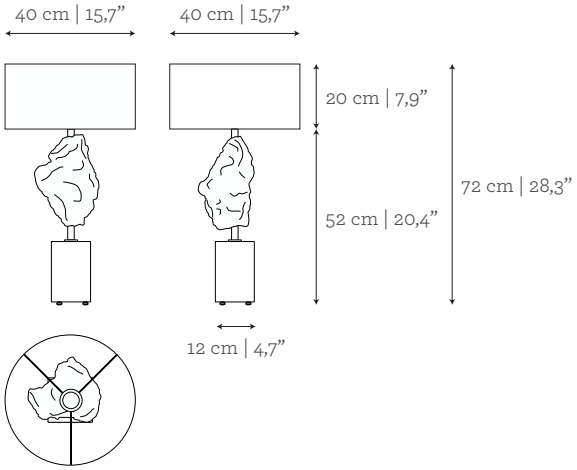

LIGHT DIRECTION

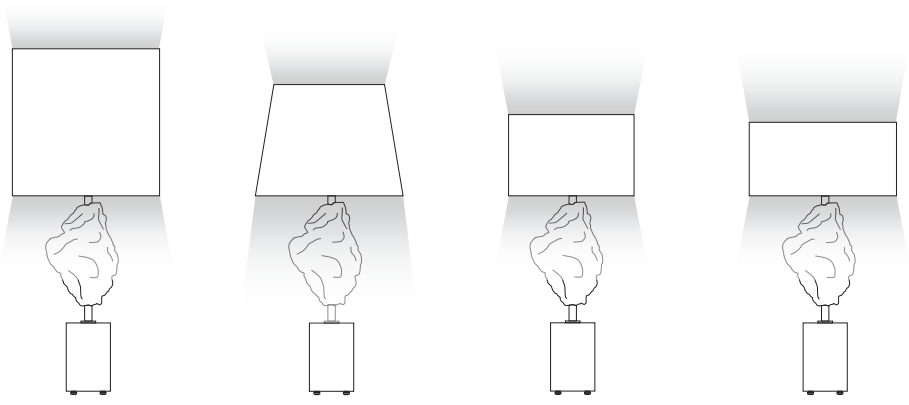

Large round lampshade | Conic lampshade | Medium rectangular lampshade | Medium round lampshade