MRP SUPPORTS
3310 N. BENZING ROAD
ORCHARD PARK, NY 14127-1538
TOLL FREE: 1-800-828-8424
PHONE: (716) 332-7673
FAX: (716) 332-7676
www.mrpsupports.com

☑ SELECT DESIRED JOIST:

- ☐ WOOD
- ☐ ALUMINUM

☑ SELECT DESIRED OPTION TO LEVEL FINAL GRADE:

- ☐ SLOPE COMPENSATOR
- ☐ SHIMS

☑ SELECT DESIRED ACCESSORY:

- ☐ PINS (IPE DECK TILES)

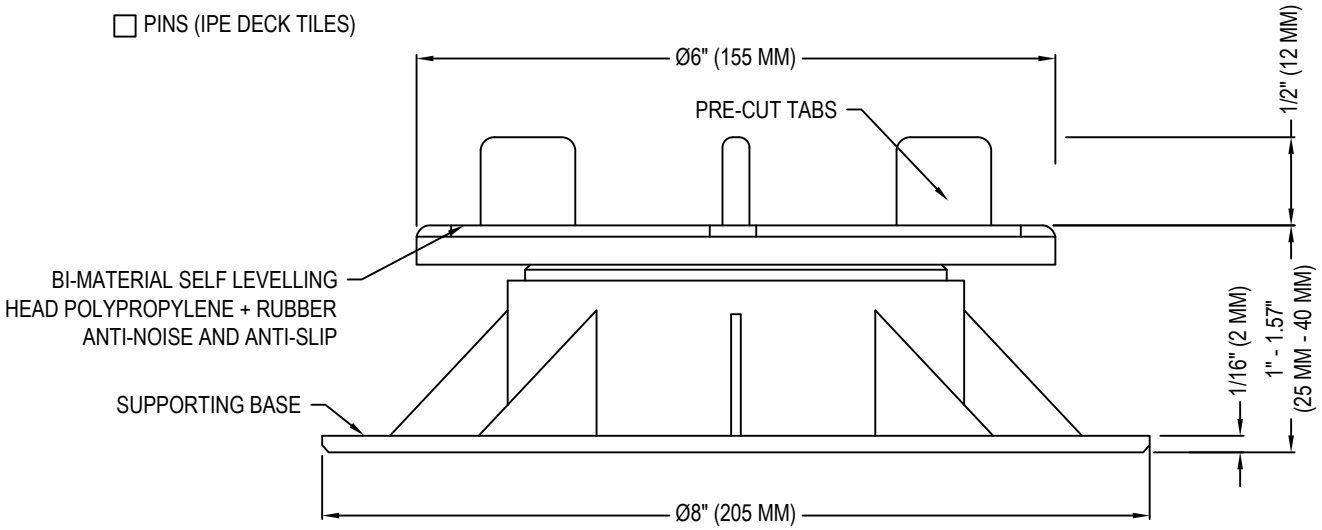

SECTION

SPECIFICATIONS:
MATERIAL: POLYPROPYLENE AND RUBBER (HEAD TOP FINISHING) [RECYCLABLE MATERIAL]
TAB WIDTH: 5/32" (4 MM)
WEIGHT: 0.48 LBS (0.218 KG)
LOAD CAPACITY: 3300 LBS
CENTRAL COMPRESSION LOADING LIMIT RESISTANCE: 31.18 KN
ECCENTRIC COMPRESSION LOADING LIMIT RESISTANCE: 15.19 KN
- BASE IS PROVIDED OF HOLES FOR WATER DRAINAGE AND 4 PRECUT LINES TO FACILITATE ANY CUTTING OF THE BASE IN CASE OF NEED.
- HEIGHT CAN BE ADDED TO ANY PEDESTAL WITH THE USE OF THE NM EXTENSION
- LEED CERTIFIED

NOTES:
1. INSTALLATION TO BE COMPLETED IN ACCORDANCE WITH MANUFACTURER'S SPECIFICATIONS.
2. DO NOT SCALE DRAWING.
3. THIS DRAWING IS INTENDED FOR USE BY ARCHITECTS, ENGINEERS, CONTRACTORS, CONSULTANTS AND DESIGN PROFESSIONALS FOR PLANNING PURPOSES ONLY. THIS DRAWING MAY NOT BE USED FOR CONSTRUCTION.
4. ALL INFORMATION CONTAINED HEREIN WAS CURRENT AT THE TIME OF DEVELOPMENT BUT MUST BE REVIEWED AND APPROVED BY THE PRODUCT MANUFACTURER TO BE CONSIDERED ACCURATE.
5. CONTRACTOR'S NOTE: FOR PRODUCT AND COMPANY INFORMATION VISIT www.CADdetails.com/info AND ENTER REFERENCE NUMBER 5359-017.

ADJUSTABLE PEDESTAL SUPPORTS

NM ADJUSTABLE PEDESTAL SUPPORTS: NM-1

PROTECTED BY COPYRIGHT ©2020 CADDETAILS.COM LTD. CADdetails.com